i.MX8MM-COMPACT-MB

21/09/2021
v1.0

SVN Revision: 1518

PCB1

PCB
Printed circuits board

Parameter Set
Solder Mask Expansion [Expansion = 0.1mm]

PCB_iMX8MM-COMPACT-MB

I2C USAGE AND ADDRESS TABLE

NAME	PERIPHERAL	ADDRESS
I2C1 1.8V	*i.MX8MM-COMPACT-MB: Camera on CSI1*	*(0x3C<<1)+RW*
	*i.MX8MM-COMPACT-MB: RTC clock, 3.3V**	*(0x50<<1)+RW*
	*i.MX8MM-COMPACT-MB: Audio Codec, 3.3V**	*(0x34<<1)+RW*
	i.MX8MM-COMPACT-MB: miniPCIEe Ref. Clock	*(0x6A<<1)+RW*
I2C2 1.8V only on CM	*i.MX8Mx-COMPACT-CM: PMIC control*	*(0x4B<<1)+RW*
	i.MX8Mx-COMPACT-CM: LVDS	*(0x2C<<1)+RW*
I2C3 1.8V	*i.MX8MM-COMPACT-MB: PCIe M.2*	

Note: 3.3V* - through voltage translator

Mounting Holes

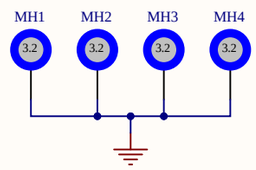

Mounting holes 7.4mm pad 3.2mm drill
BOARD MOUNTING HOLES
ONE IN EACH CORNER

Fiducials

FIDICIALS 4x TOP

FIDICIALS 4x BOTTOM

DESIGN CONSIDERATIONS

DESIGN NOTE:
Example text for informational design notes.

DESIGN NOTE:
Example text for critical design notes.

LAYOUT NOTE:
Example text for critical layout guidelines.

Title	*COVER PAGE*		*Ronetix GmbH*
Size: A3	Number: 1	Revision: 1.0	*Hirschstettner Str. 19/Z110*
Date: 21/09/2021	Time: 10:10:08	Sheet 1 of 12	*1220 Vienna*
File: 01_Title Page.SchDoc			*Austria*

RONETIX DEVELOPMENT TOOLS

Hirose DF40C

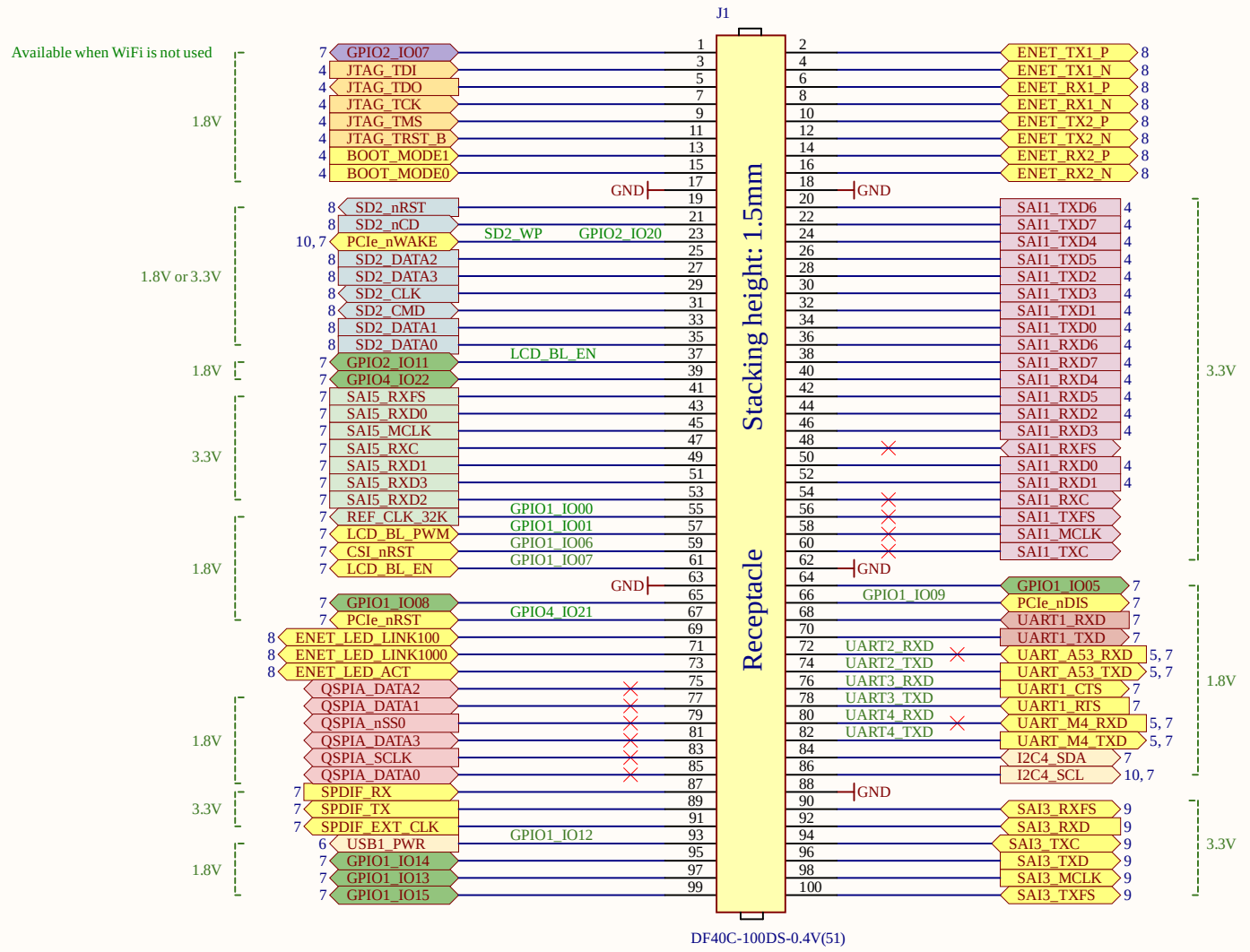

Title *Hirose DF40C*			*Ronetix GmbH* *Hirschstettner Str. 19/Z110* *1220 Vienna* *Austria*
Size: A3	Number: 2	Revision: 1.0	
Date: 21/09/2021	Time: 10:10:08	Sheet 2 of 12	
File: 02_Hirose_DF40C.SchDoc			

RONETIX DEVELOPMENT TOOLS

Power Supply

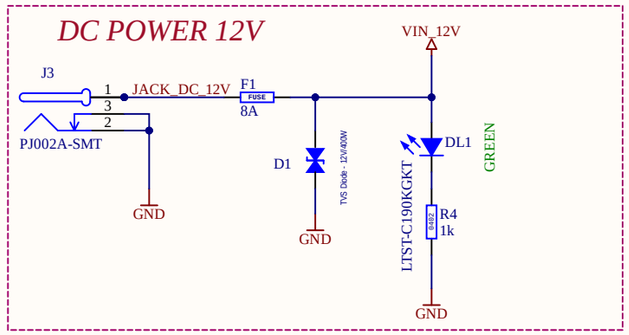

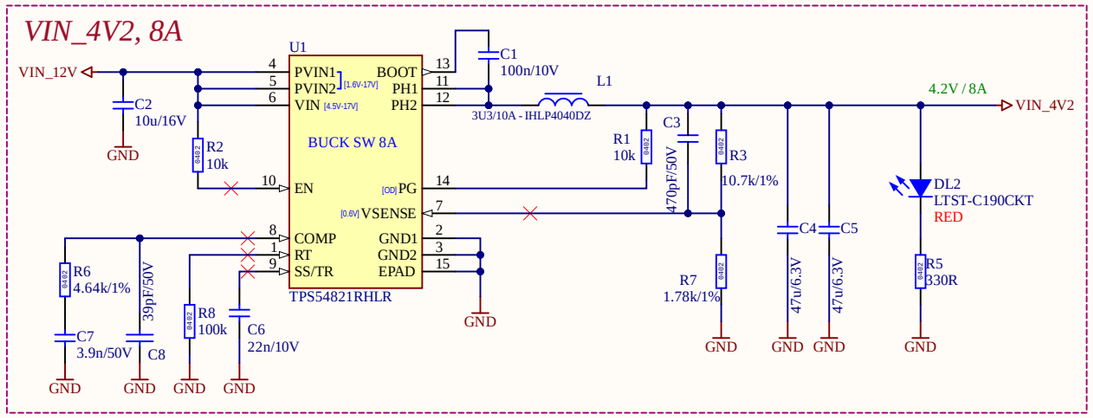

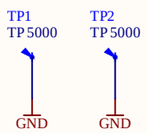

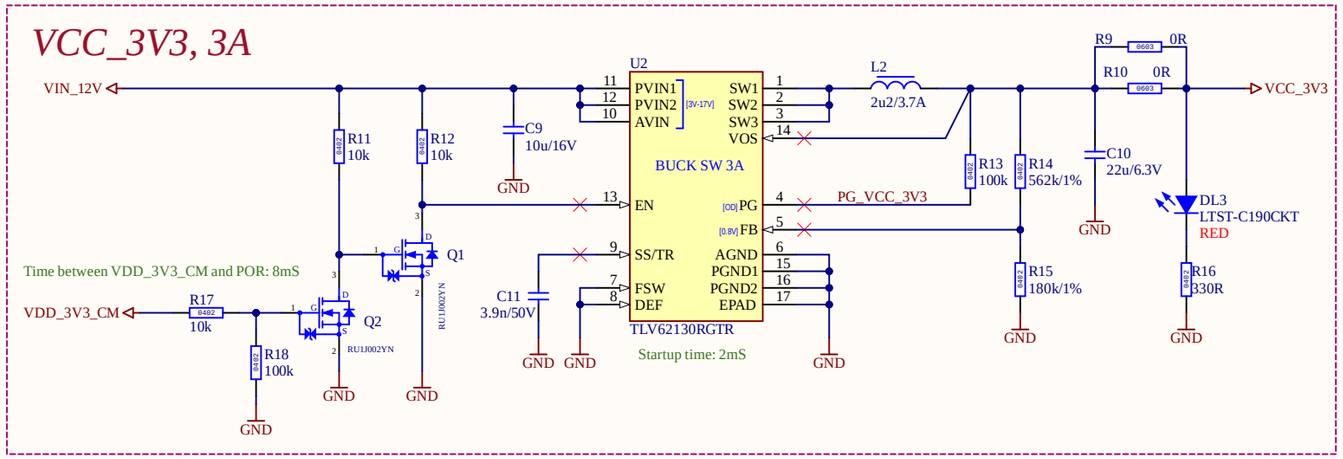

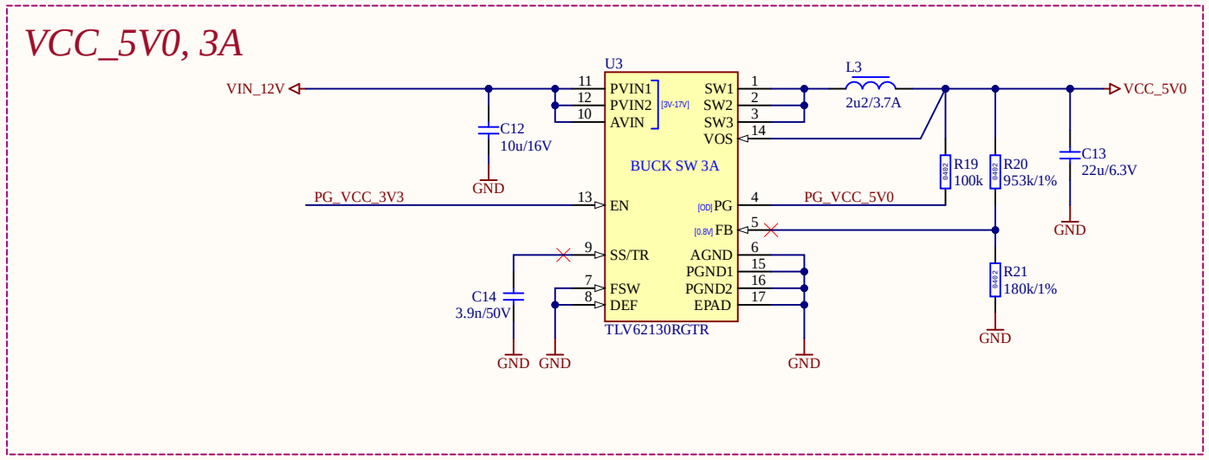

Title **Power Supply**			Ronetix GmbH Hirschstettner Str. 19/Z110 1220 Vienna Austria
Size: A3	Number: 3	Revision: 1.0	
Date: 21/09/2021	Time: 10:10:08	Sheet 3 of 12	
File: 03_Power.SchDoc			

RONETIX DEVELOPMENT TOOLS

BOOT, JTAG

i.MX8MM: Boot ROM Fuse

	Address	7	6	5	4	3	2	1	0
	0x470[15:8]	**BOOT_CFG[15]**	**BOOT_CFG[14]**	**BOOT_CFG[13]**	**BOOT_CFG[12]**	**BOOT_CFG[11]**	**BOOT_CFG[10]**	**BOOT_CFG[9]**	**BOOT_CFG[8]**
	0x470[15:8]	Infinit-Loop (Debug USE only) 0 - Disable 1 - Enable	001 - SD/eSD			Port Select: 00 - eSDHC1 01 - eSDHC2 10 - eSDHC3		SD Power Cycle/eMMC Reset Enable: '0' - Disabled '1' - Enabled	SD Loopback Clock Source Sel (for SDR50 and SDR104 only) '0' - through SD pad '1' - direct
	0x470[15:8]		010 - MMC/eMMC						
	0x470[15:8]		011 - NAND			Pages In Block: 00 - 128 01 - 64 10 - 32 11 - 256		Nand_Row_address_bytes: 00 - 3 01 - 2 10 - 4 11 - 5	
	0x470[15:8]		100 - QSPI			QSPI Instance 0 - QuadSPI0 1 - Reserved	SDR SMP: "000" : Default "001-111"		
	0x470[15:8]		110 - SPI NOR			Port Select: 000 - eCSPI1 001 - eCSPI2 002 - eCSPI3			SPI Addressing: 0 - 3-bytes (24-bit) 1 - 2-bytes (16-bit)
	0x470[15:8]	Others - Reserved for future use							
		BOOT_CFG[7]	**BOOT_CFG[6]**	**BOOT_CFG[5]**	**BOOT_CFG[4]**	**BOOT_CFG[3]**	**BOOT_CFG[2]**	**BOOT_CFG[1]**	**BOOT_CFG[0]**
SD/eSD	0x470[7:0]	Fast Boot: 0 - Regular 1 - Fast Boot	Reserved	Reserved	Bus Width: 0 - 1-bit 1 - 4-bit	Speed 000 - Normal/SDR12 001 - High/SDR25 010 - SDR50 011 - SDR104 101 - Reserved for DDR50 Others - Reserved			Reserved
MMC/eMMC	0x470[7:0]		Bus Width: 000 - 1-bit 001 - 4-bit 010 - 8-bit 101 - 4-bit DDR (MMC 4.4) 110 - 8-bit DDR (MMC 4.4) Else - reserved.			Speed 00 - Normal 01 - High 10 - Reserved for HS200 11 - Reserved		USDHC1 IO VOLTAGE SELECTION 0 - 3.3V 1 - 1.8V	USDHC2 IO VOLTAGE SELECTION 0 - 3.3V 1 - 1.8V
NAND	0x470[7:0]	BT_TOGGLEMODE	BOOT_SEARCH_COUNT: 00 - 2 01 - 2 10 - 4 11 - 8		Toggle Mode 33MHz Preamble Delay, Read Latency: '000' - 16 GPMICLK cycles. '001' - 1 GPMICLK cycles. '010' - 2 GPMICLK cycles. '011' - 3 GPMICLK cycles. '100' - 4 GPMICLK cycles. '101' - 5 GPMICLK cycles. '110' - 6 GPMICLK cycles. '111' - 7 GPMICLK cycles. '1111' - 15 GPMICLK cycles.			Reserved
QSPI	0x470[7:0]	HSPHS: Half Speed Phase Selection 0 : select sampling at non-inverted clock 1: select sampling at inverted clock	HSDLY: Half Speed Delay selection 0 : one clock delay 1: two clock delay	FSPHS: Full Speed Phase Selection 0 : select sampling at non-inverted clock 1: select sampling at inverted clock	FSDLY: Full Speed Delay selection 0 : one clock delay 1: two clock delay	Reserved	Reserved	Reserved	Reserved
SPINOR	0x470[7:0]	CS select (SPI only): 00 - CS#0 (default) 01 - CS#1 10 - CS#2 11 - CS#3		Reserved	Reserved	Reserved	Reserved	Reserved	Reserved

BMODE[1:0]	i.MX8M-MINI	i.MX8M-NANO
00	Boot From Fuses	Boot From Fuses
01	Serial Downloader	Serial Downloader
10	Internal Boot	uSDHC3, eMMC
11	Reserved	uSDHC2, Micro SD

BOOT from SD card i.MX8MN (SDHC2):
BOOT_MODE = 011
SW1: doesn't matter
SW4: doesn't matter

BOOT from eMMC i.MX8MN (SDHC3):
BOOT_MODE = 010
SW1: doesn't matter
SW4: doesn't matter

BOOT from SD2 card i.MX8MM:
SW1: 3,5 - ON; all other OFF
SW4: 1,2 - ON

BOOT from eMMC i.MX8MM (SDHC3):
SW1: 4,6 - ON; all other OFF
SW4: 1, 2 - ON

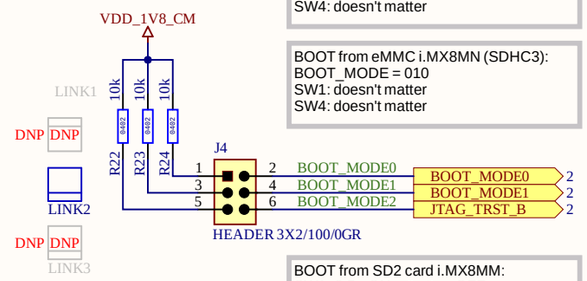

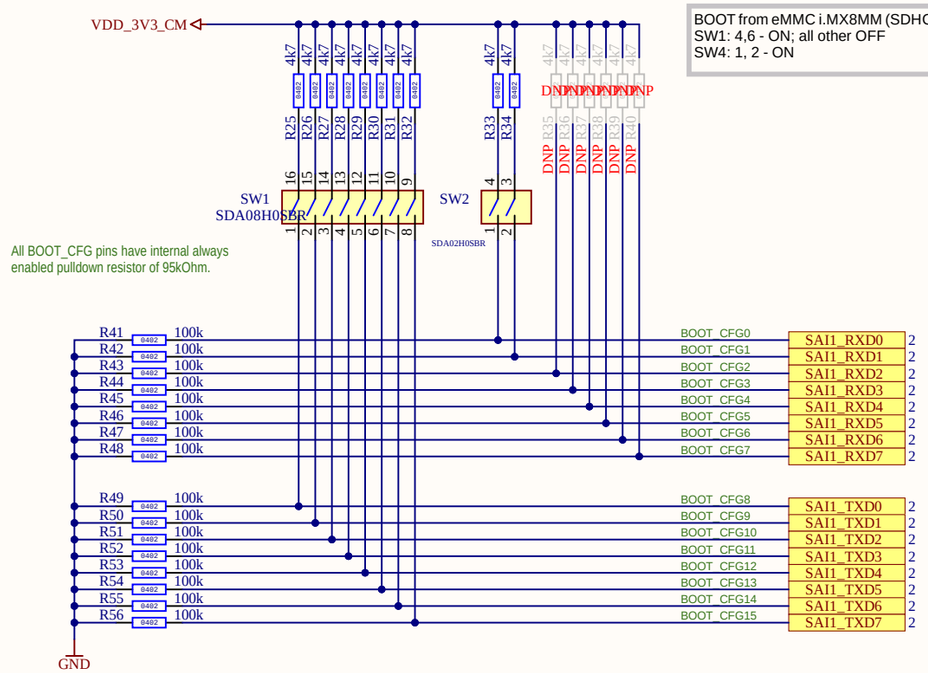

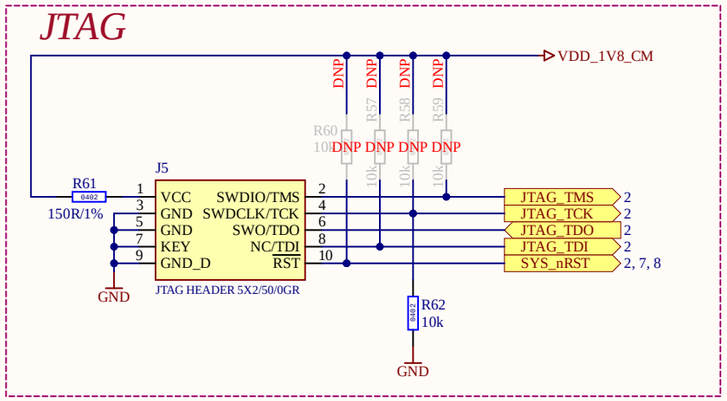

Title **BOOT, JTAG**			*Ronetix GmbH* *Hirschstettner Str. 19/Z110* *1220 Vienna* *Austria*
Size: A3	Number: 4	Revision: 1.0	
Date: 21/09/2021	Time: 10:10:08	Sheet 4 of 12	
File: 04_BOOT_JTAG.SchDoc			

RONETIX DEVELOPMENT TOOLS

Debug UART

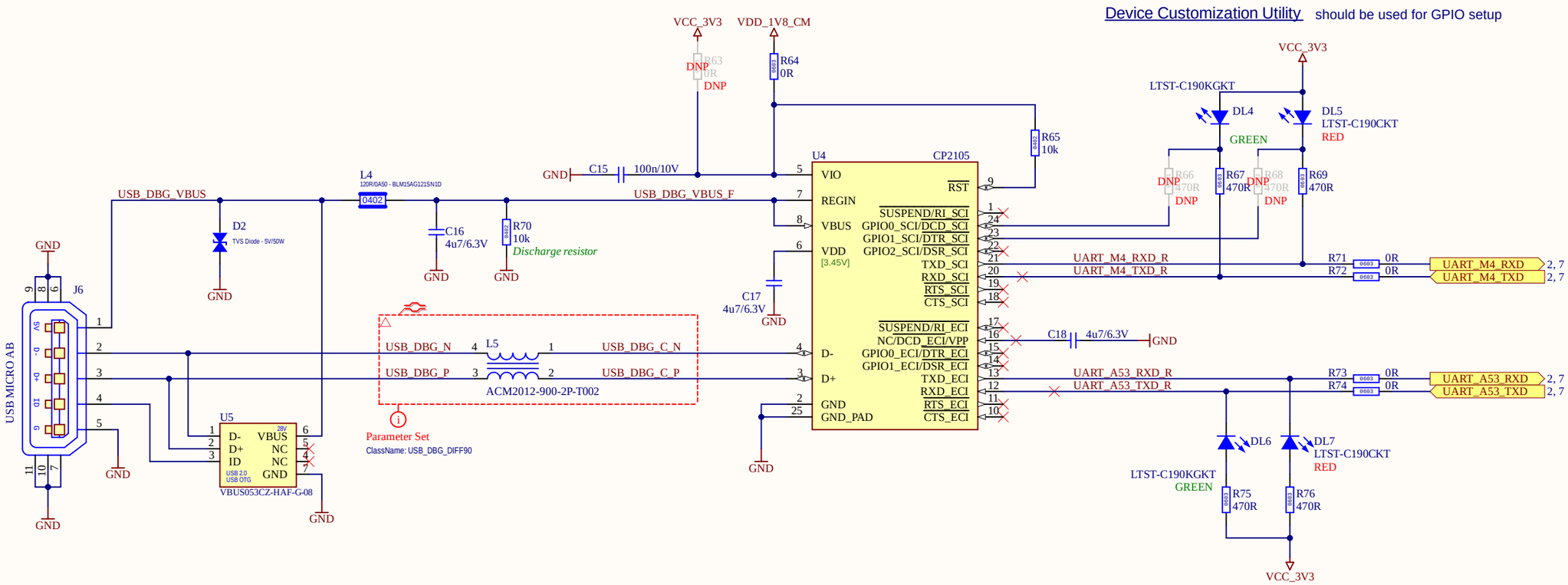

Title	*Debug UART*		
Size: A3	Number: 5	Revision: 1.0	
Date: 21/09/2021	Time: 10:10:08	Sheet 5 of 12	
File: 05_Debug_UART.SchDoc			

Ronetix GmbH
Hirschstettner Str. 19/Z110
1220 Vienna
Austria

RONETIX DEVELOPMENT TOOLS

USB Host & OTG

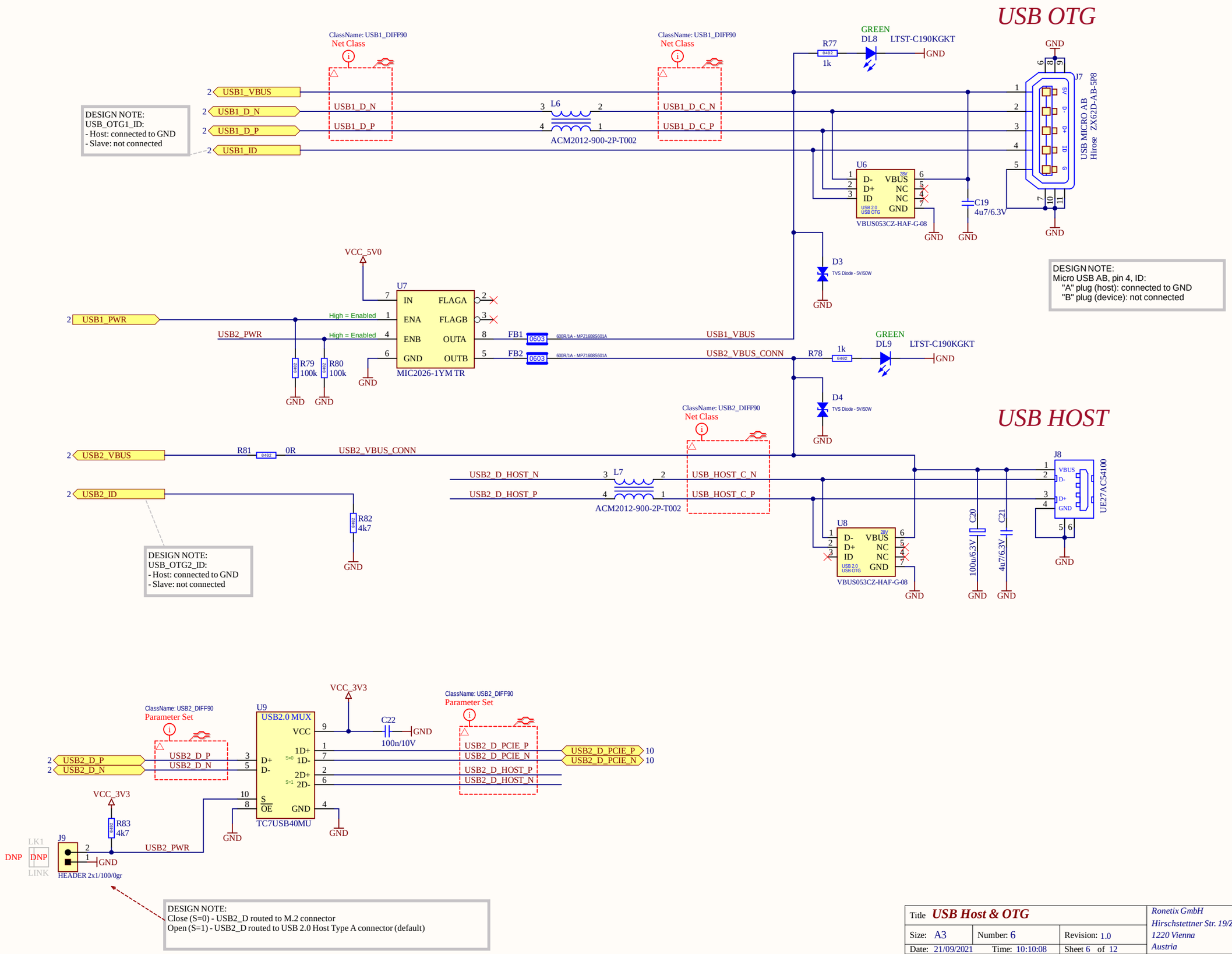

Title	USB Host & OTG		
Size: A3	Number: 6	Revision: 1.0	
Date: 21/09/2021	Time: 10:10:08	Sheet 6 of 12	
File: 06_USB2_OTG.SchDoc			

Ronetix GmbH
Hirschstettner Str. 19/Z110
1220 Vienna
Austria

RONETIX DEVELOPMENT TOOLS

GPIO, RTC, BUTTONS

Expansion Connectors

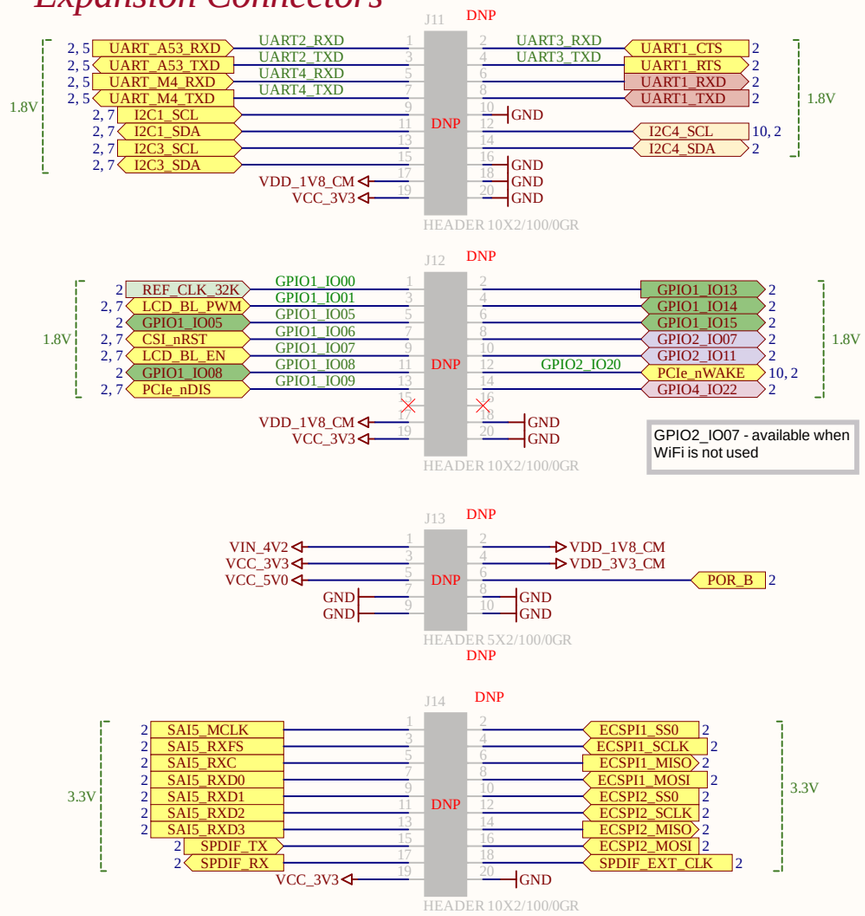

GPIO2_IO07 - available when WiFi is not used

RTC Clock

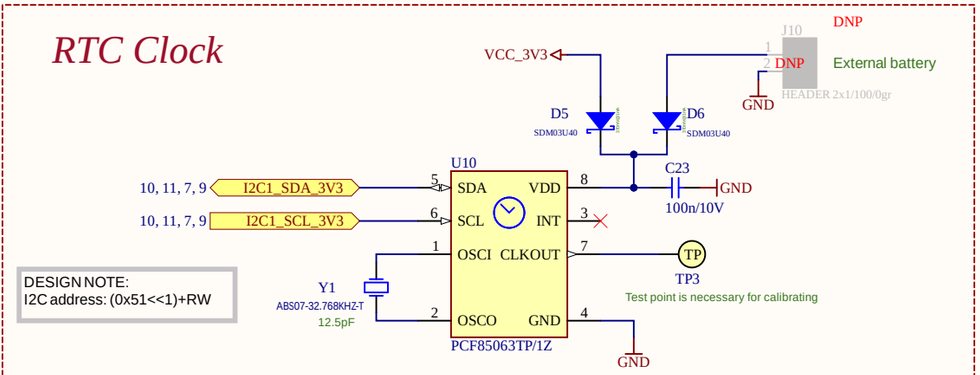

DESIGN NOTE:
I2C address: (0x51<<1)+RW

Buttons

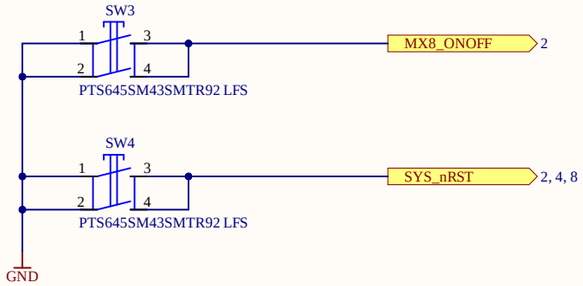

I2C Voltage-Level Translator

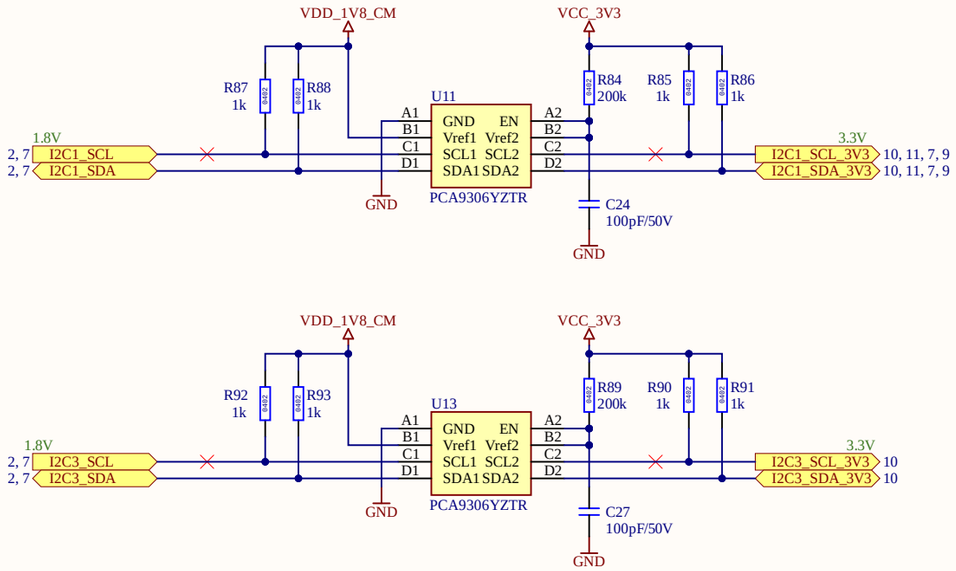

GPIO Voltage-Level Translator

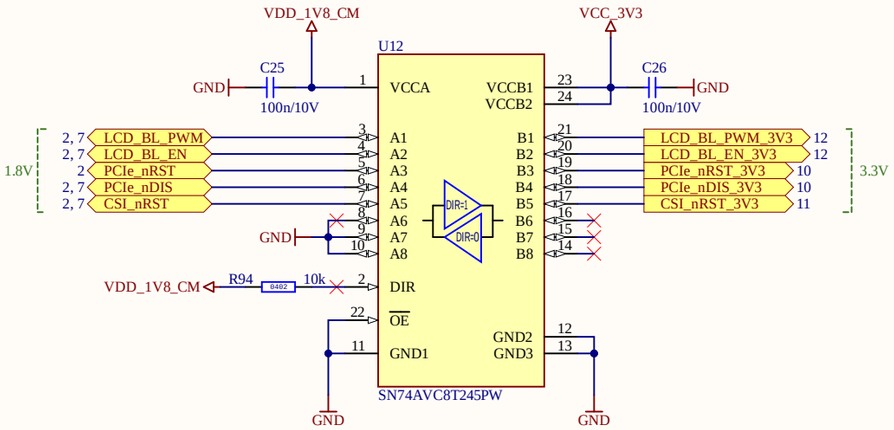

Title	GPIO, RTC, BUTTONS		Ronetix GmbH Hirschstettner Str. 19/Z110 1220 Vienna Austria
Size: A3	Number: 7	Revision: 1.0	
Date: 21/09/2021	Time: 10:10:08	Sheet 7 of 12	
File: 07_GPIO.SchDoc			

RONETIX DEVELOPMENT TOOLS

MicroSD, Ethernet

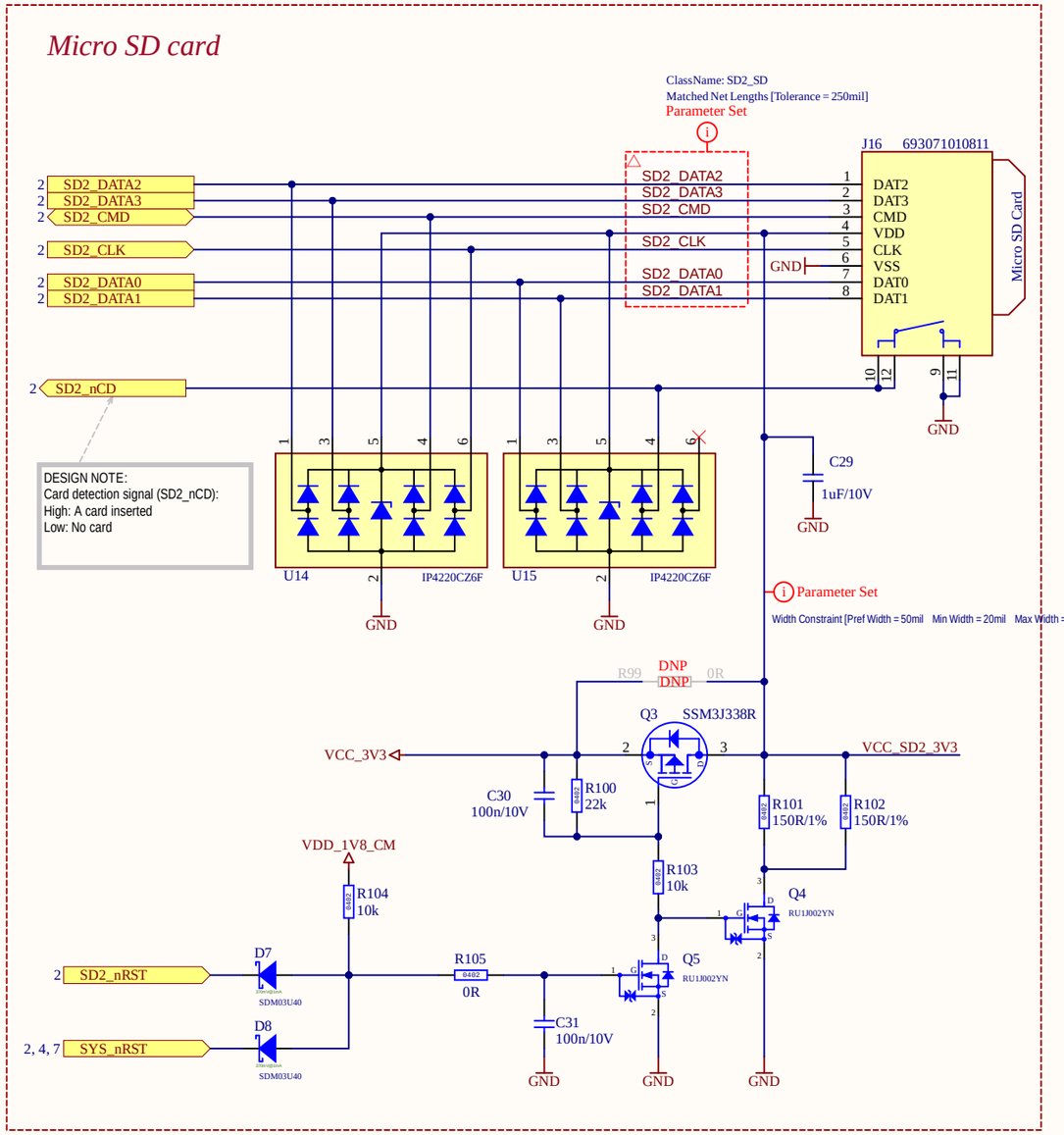

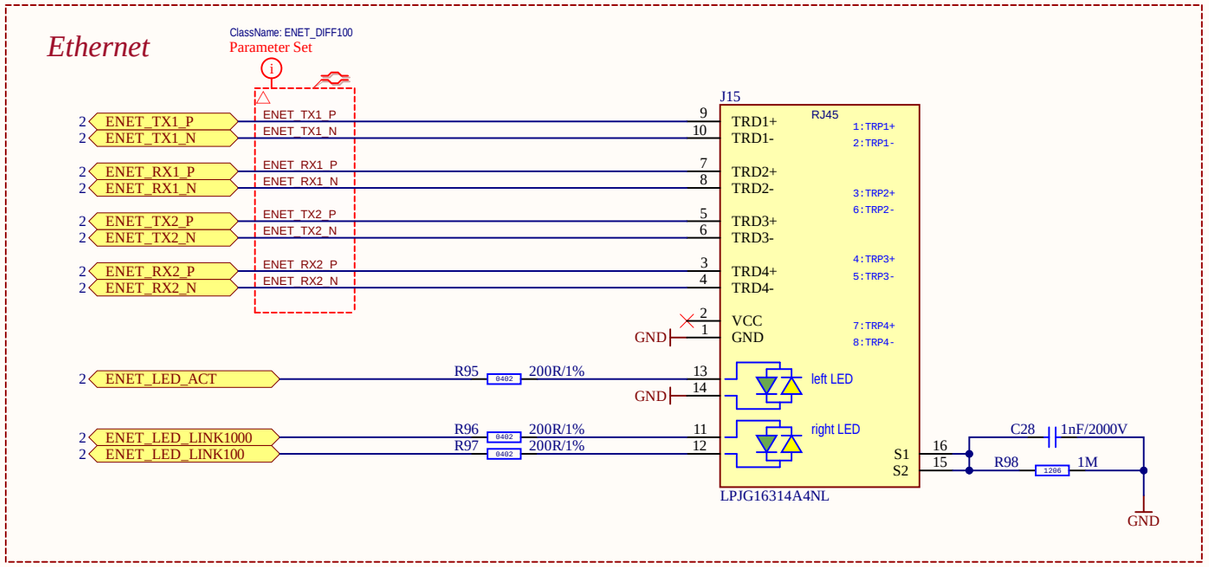

Title *MicroSD, Ethernet*			*Ronetix GmbH*
Size: A3	Number: 8	Revision: 1.0	*Hirschstettner Str. 19/Z110*
Date: 21/09/2021	Time: 10:10:09	Sheet 8 of 12	*1220 Vienna*
File: 08_MicroSD_ETH.SchDoc			*Austria*

RONETIX DEVELOPMENT TOOLS

AUDIO

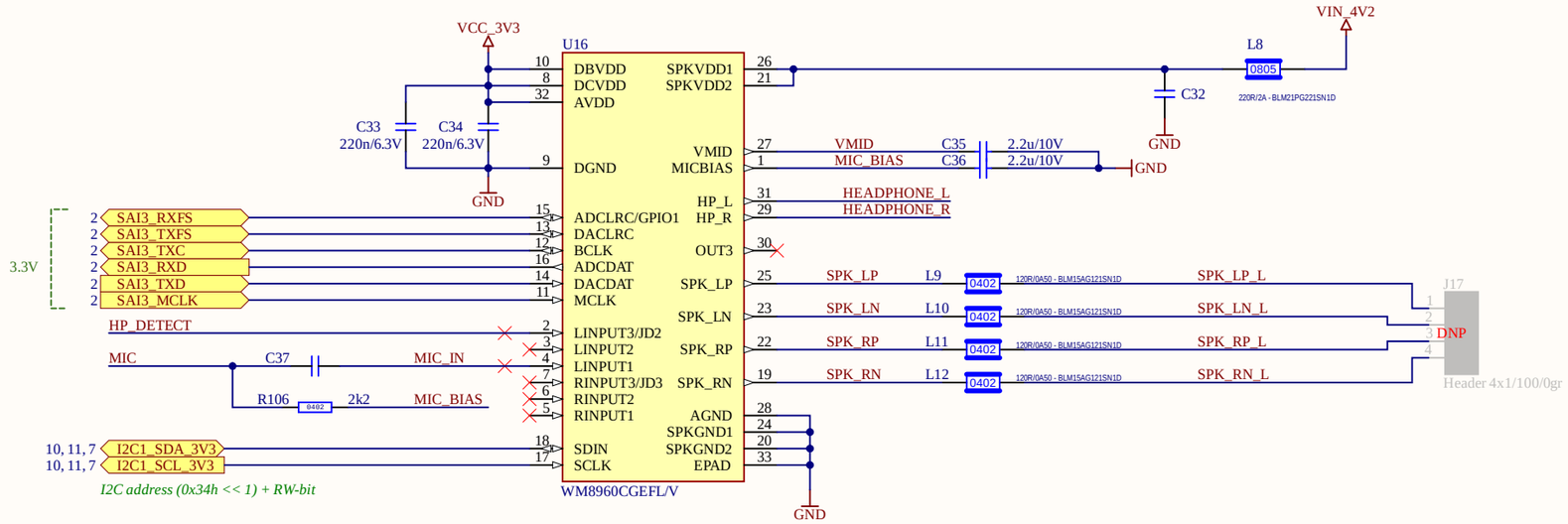

Speakers, 2x1W, 8 Ohm

Microphone - Pink

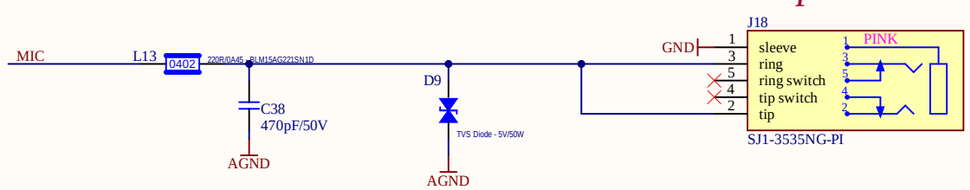

Headphones - Green

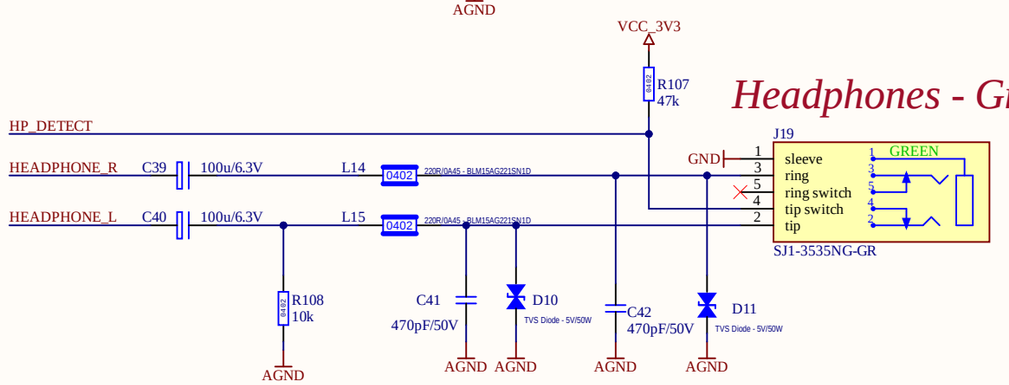

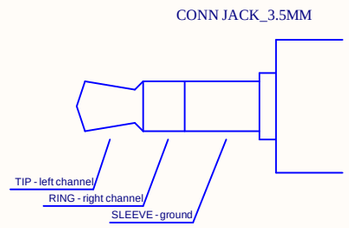

Title **AUDIO**			*Ronetix GmbH*
Size: A3	Number: 9	Revision: 1.0	*Hirschstettner Str. 19/Z110*
Date: 21/09/2021	Time: 10:10:09	Sheet 9 of 12	*1220 Vienna*
File: 09_Audio.SchDoc			*Austria*

RONETIX DEVELOPMENT TOOLS

M.2 PCI Express

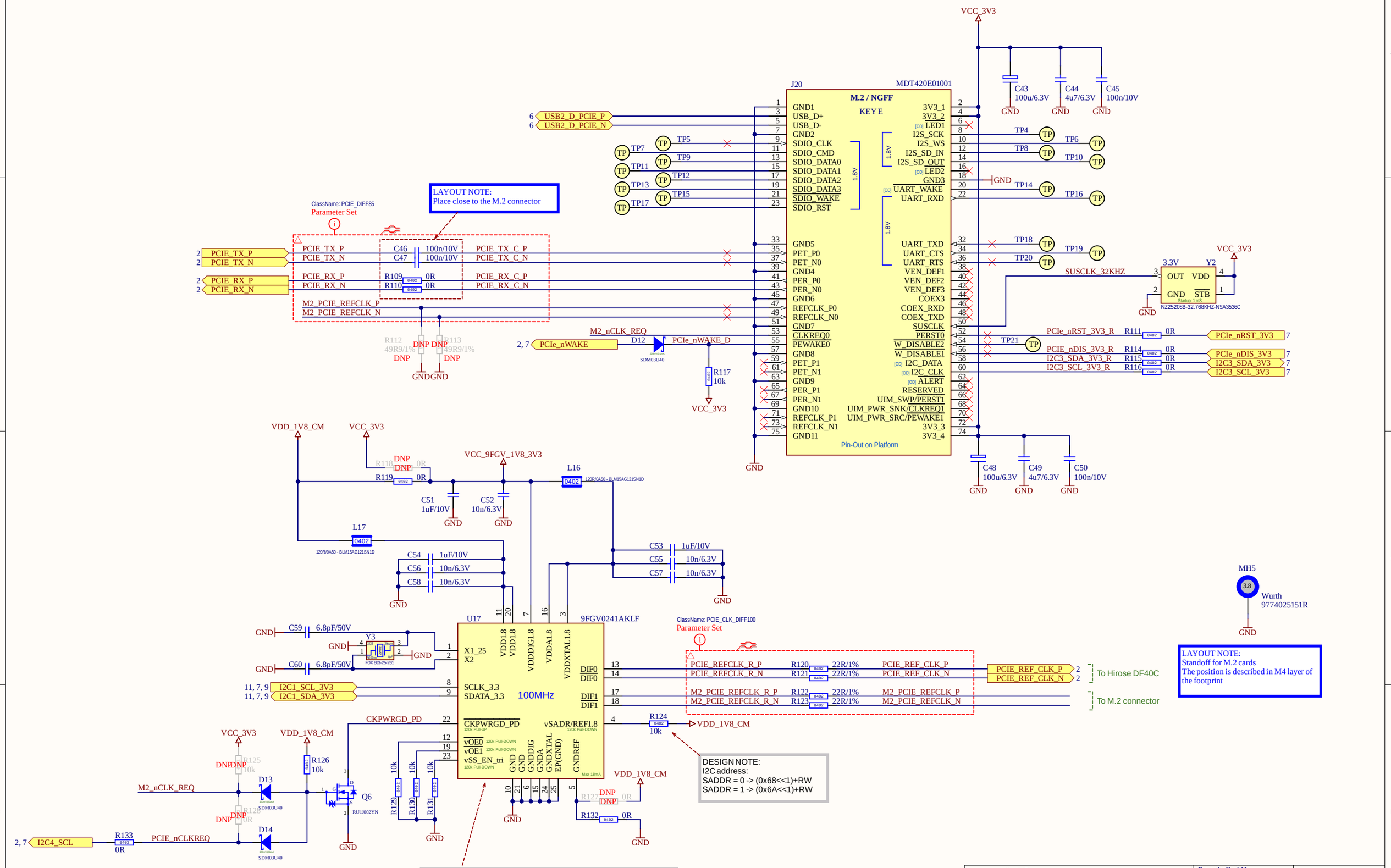

Title	*M.2 PCI Express*		
Size: A3	Number: 10	Revision: 1.0	
Date: 21/09/2021	Time: 10:10:09	Sheet 10 of 12	
File: 10_PCIe_M.2.SchDoc			

Ronetix GmbH
Hirschstettner Str. 19/Z110
1220 Vienna
Austria

RONETIX DEVELOPMENT TOOLS

Camera

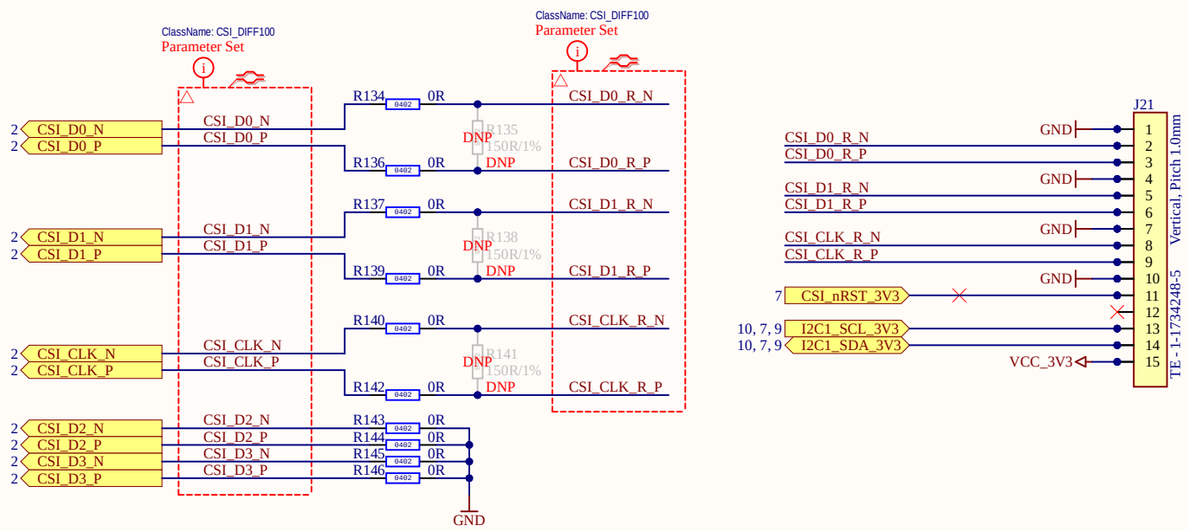

DESIGN NOTE:
PCAM 5C: 5 MP CAMERA MODULE
OV5640 Camera sensor

I2C address: (0x03C<<1)+RW

DESIGN NOTE:
PCAM 5C uses 12MHz XVCLK instaed of typical 24MHz

Title *Camera*			*Ronetix GmbH*
Size: A3	Number: 11	Revision: 1.0	*Hirschstettner Str. 19/Z110*
Date: 21/09/2021	Time: 10:10:09	Sheet 11 of 12	*1220 Vienna*
File: 11_Camera.SchDoc			*Austria*

RONETIX DEVELOPMENT TOOLS

LVDS Display

DISPLAY - G101ICE-L01, 10.1", 1280x800, 75MHz

DESIGN NOTE:
Display Cable Data-Module: 12037186

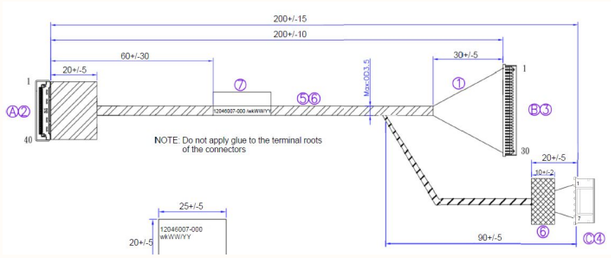

Pin assignment								
Signal	Connector A (display)		Connector B (eMotion)	Signal	Connector A (display)		Connector C (eMotion)	Remark
VCCS	1			LED_GND	29,30		7	
VCCS	2		2	LED_GND	31,32		6	
VCCS	3		1	LED_GND	33			
LV0N	8		18	NC	34,35			
LV0P	9		17	LED_PWM	27		2	
GND	10		19	LED_EN	28		3	
LV1N	11		16	LED_VCC	36,37		4	
LV1P	12		15	LED_VCC	38,39		5	
GND	13		14	LED_VCC	40			
LV2N	14		13					
LV2P	15		12					
GND	16							
LVCLKN	17		11					
LVCLKP	18		10					
GND	19							
LV3N	20		9					
LV3P	21		8					
GND	22		7					

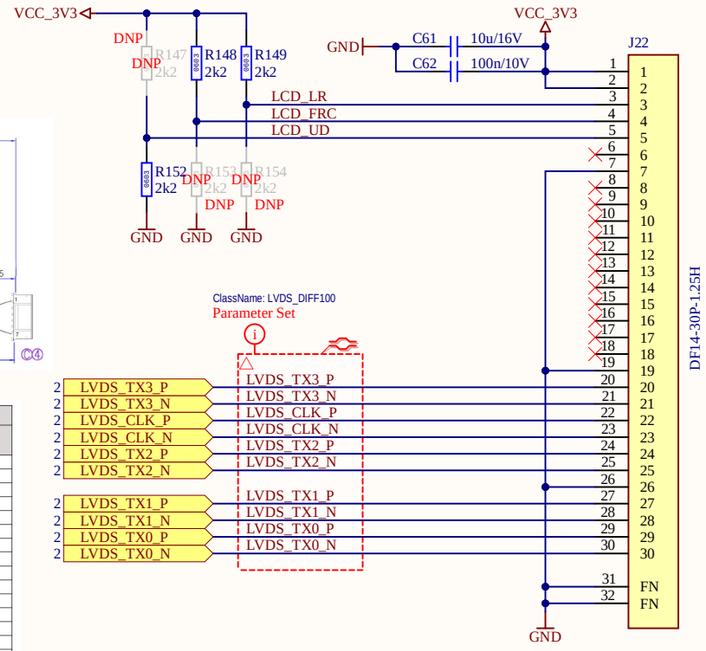

BACK LIGHT

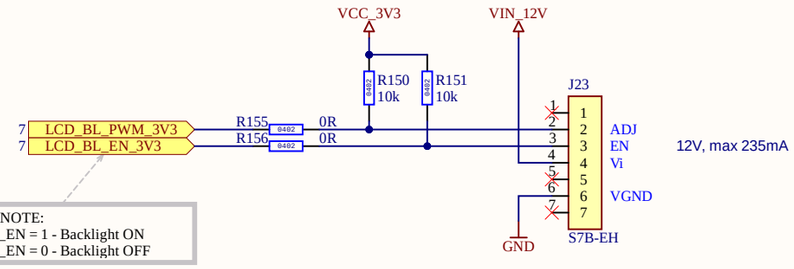

DESIGN NOTE:
LCD_BL_EN = 1 - Backlight ON
LCD_BL_EN = 0 - Backlight OFF

DESIGN NOTE:
Invertor Cabel eMotion G2 -> G070Y2-L01

Board	LCD
4	1 Vi (Yellow)
2	2 ADJ (BLUE)
3	3 EN (RED)
6	4 VGND(BLK)

Title LVDS Display			Ronetix GmbH Hirschstettner Str. 19/Z110 1220 Vienna Austria
Size: A3	Number: 12	Revision: 1.0	
Date: 21/09/2021	Time: 10:10:09	Sheet 12 of 12	
File: 12_LVDS_Display.SchDoc			

RONETIX DEVELOPMENT TOOLS